WEVER & DUCRÉ LIGHTING

DEEP petit IP65 1.0

153761W3

PROJECT

TYPE

NOTES

QUANTITY

DATE

LOW IP65

Round ceiling recessed downlight made from die-cast aluminium; surface White Matt; powder coated, matt texture; RAL 9010; installation without tools using wire springs; suitable for ceiling thickness of 4-25 mm; recessed depth 60 mm; beam angle 31°; with COB (Chip on Board) technology for maximum efficiency; light colour 2700 K; ≤ 2 SDCM (initial MacAdam); CRI ≥ 90; degree of protection IP65; Class 3; IC rated; UGR ≤ 16; VDU compatible workplace luminaire according to DIN EN 12464-1; luminance above 65° ≤ 3000 cd/m²; driver not included; fits into Kaiser ThermoX® 9320-11; light source not replaceable;

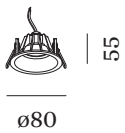

LUMINAIRE

Ceiling
Recessed
White Matt
RAL 9010 [a]
IP65
IC rated
Exterior
590 lm

LED Module

2700 K
CRI ≥ 90
L80 / 50000 h
≤ 2 SDCM (initial MacAdam)

Optical

Medium (standard)
beam angle 31°
CIE flux code: 94 99 100 100 100

Electrical

excl. driver
17 V
Class III
Standard

Physical

diameter 80 mm
height 55 mm
0.1 kg
wire springs

Cutout

diameter 68-70 mm
min. ceiling thickness 4 mm
max. ceiling thickness 25 mm
recessed depth 60 mm

datasheet.quicksum.material

Aluminium

[a] Colour may deviate slightly due to production conditions

LIGHT DISTRIBUTION

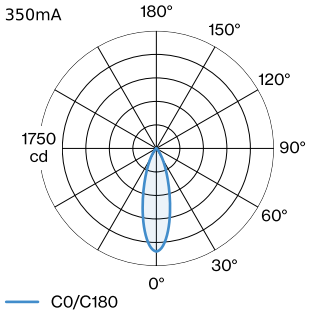

['153761W3'] The technical data represent rated values for an ambient temperature of 25°C. The data values for the luminous flux are initially subject to a tolerance of +/- 10%, those for the electrical connected load are initially subject to a tolerance of +/- 10%, and those for the colour temperature are initially subject to a tolerance of +/- 150 K. No liability is assumed for typographical or printing errors. The general terms and conditions of Wever & Ducré BV apply.
© Wever & Ducré BV · Spinnerijstraat 99/21 · 8500 Kortrijk · Belgium · www.weverducre.com

CONE DIAGRAM

medium (standard) 350mA

h (m)	E0° (lx)	ø (m)
1	1540	0.54
2	380	1.08
3	170	1.62
4	100	2.17
5	60	2.71

Maintenance Factor

Operating Time [h]	10.000	20.000	30.000	40.000	50.000
LLMF	0.96	0.92	0.88	0.85	0.81
LSF	1	1	1	1	1

MF	LMF × RSMF × LLMF × LSF
MF	Maintenance Factor
LMF[a]	Luminaire Maintenance Factor
RSMF[a]	Room Surface Maintenance Factor
LLMF	Lamp Lumens Maintenance Factor
LSF	Lamp Survival Factor

[a]According to "CIE 97, Maintenance of indoor electric lighting systems", 2005, ISBN 3-900-734-34-8. The values must be determined by the planner.

ELECTRICAL ACCESSORIES

Driver

Type	Colour	Voltage	L·W·H (MM)	Item number
6W | 350mA | 8.6-18V		8.6-18V	67·39·22	90213303
17W | 350mA | 5-49V | IP68		5-49V	122·54·26	90213602
10W | 350mA | 13-26V | phase-cut dim		13-26V	115·41·25	90223406

['153761W3'] The technical data represent rated values for an ambient temperature of 25°C. The data values for the luminous flux are initially subject to a tolerance of +/- 10%, those for the electrical connected load are initially subject to a tolerance of +/- 10%, and those for the colour temperature are initially subject to a tolerance of +/- 150 K. No liability is assumed for typographical or printing errors. The general terms and conditions of Wever & Ducré BV apply.
© Wever & Ducré BV · Spinnerijstraat 99/21 · 8500 Kortrijk · Belgium · www.weverducre.com